DANISH
TECHNOLOGICAL
INSTITUTE

Test of ShineOn™

for

SCF Technologies A/S
Att.: Henrik Jensen
Smedeholm 13B
2730 Herlev

Date:	18 December 2008
Project no.:	1120519-02
Pages:	6
No. of encl.:	0
Initials:	alh/eta
File name:	1166295_Test of ShineOn-report.docm

Anne-Lise Høg Lejre

Phone: +45 72 20 31 16
E-mail: anne-lise.h.lejre@teknologisk.dk

18 December 2008

DANISH TECHNOLOGICAL INSTITUTE

Test of ShineOn™

According to agreement we have carried out a test of ShineOn for SCF-Technologies

Summary
Based on the executed tests the following conclusions can be made:

The ShineOn product can be categorised as self-cleaning according to standard NMP3-CT-2003-505952, independent of the UV-exposure.

No operator dependency was registered at the application of the ShineOn product.

Background
SCF-Technologies has developed a product for coating of windows. The principle behind the product is that when the windows have been coated with ShineOn, organic dirt is degraded by means of sunlight and rainwater completes the self-cleaning effect. This test has been requested in order to get an assessment of the self-cleaning effect of the product ShineOn on outdoor windows.

Test
The test has been carried out based on a test method developed under an EU Framework Programme "Project Self-cleaning Glass: Nano-Structured Self Cleaning Glasses – Modelling and Laboratory test for Fundamental Knowledge on Thin Film Coatings, EC Normalisation and Customer Benefits – Contract No NMP3-CT-2003-505952".

The method mainly comprises a cyclic test where the samples are sprayed with a dirt mixture, irradiated with UV-light and subsequently rinsed under water. This cycle is repeated twice, and haze is measured between each step.

The test has been extended to include two test persons and two light exposure intensities (normal corresponding to the specification of the standard and 1.75x).

Furthermore, the test includes a comparison with untreated glass.

Test samples
Prior to the start-up of the self-cleaning test the test samples have been prepared in the following way.
The cut-up glass samples are cleaned using Shine-On pre-treatment liquid as described in the related operating manual.

After that, ShineOn active is applied according to the operating manual.
Eleven repetitions have been carried out for each parameter.

In order to make a comparison glass references are included in the test; in total 16 of these have been tested.

Conditioning
The samples are stored for 2 weeks prior to the start-up of the test which corresponds to the prescription of the operating manual that treated windows must not be cleaned mechanically for 2-4 weeks after coating.

Self-cleaning test
The test is carried out according to the method description, i.e. the samples pass through the following cycle:

The glass is cleaned according to the following procedure.
The test samples are irradiated under UVA for 12 hours. The irradiation is carried out in a QUV apparatus with UVA-340 lamps according to ISO 4892. The light intensity is 0.68 $W/m^2/nm$ at 340 nm.

Measurement of haze original ($H_{original}$), measurements are made on 5 spots at each test sample. The measurement is carried out with a BYK Gardner Hazegard plus Hazemeter.
Subsequently, the dirt mixture, which is prepared according to the standard, is applied. The dirt and water exposures are carried out in a spraying system as illustrated schematically below.

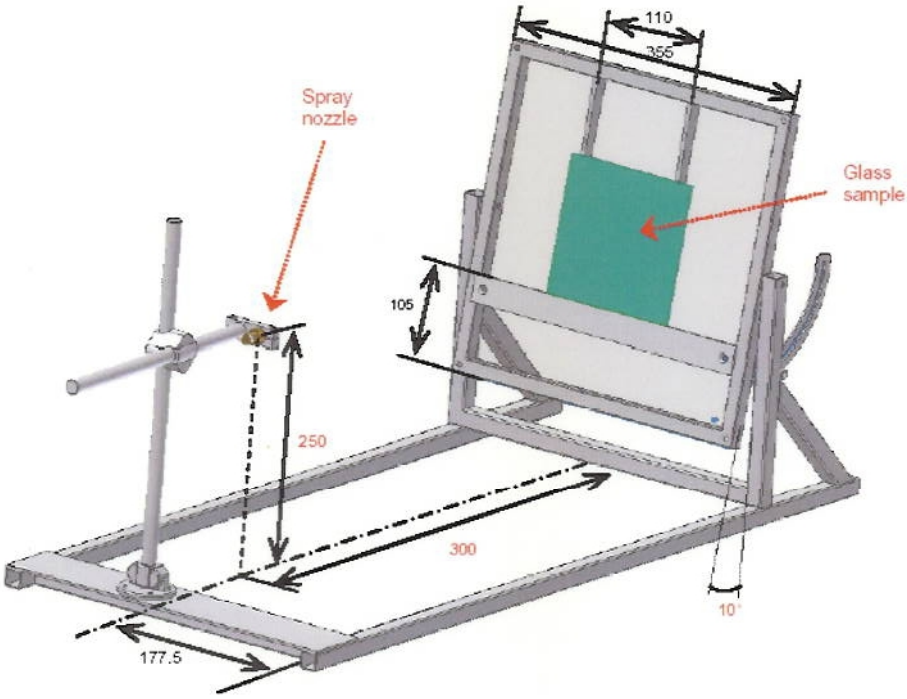

After drying, haze is measured again ($H_{cycle1dirt}$).

Once more the test samples are irradiated with UVA for 12 hours, and haze is measured ($H_{cycle1sun}$).
Then the samples are sprayed with deionised water, the samples are dried and haze is measured ($H_{cycle1rain}$).

The above cycle is repeated once more in order to obtain the following data:

- Haze after sample preparation = $H_{original}$
- Haze after coating of dirt – cycle 1 = $H_{cycle1dirt}$
- Haze after UV exposure – cycle 1 = $H_{cycle1sun}$
- Haze after water spraying – cycle 1 = $H_{cycle1rain}$
- Haze after coating of dirt – cycle 2 = $H_{cycle2dirt}$
- Haze after UV exposure – cycle 2 = $H_{cycle2sun}$
- Haze after water spraying – cycle 2 = $H_{cycle2rain}$ = H_{final}

The self-cleaning effect is calculated by the following equation:

$$\% \text{ Cleaning Effect} = 100 \text{ x } \frac{H_{dirt2} - H_{final}}{H_{dirt2} - H_{initial}}$$

According to the standard the self-cleaning effect must be >85% for the product to be classified as self-cleaning.

In addition to the test described in the standard, we have carried out further tests in order to document the following:

1) Operator dependency
2) Normal irradiation in the self-cleaning test vs. 1.75x intensity

Results

Assessment of the data precision:

The self-cleaning effect is calculated by the following equation (1):

$$\% \text{ Cleaning Effect} = 100 \text{ x } \frac{H_{dirt2} - H_{final}}{H_{dirt2} - H_{initial}}$$

It was observed that a high initial haze may influence final result for which reason we have carried out a comparison between the following data: 1) calculations made on raw data, 2) calculations, in which initial haze has been set at a fixed value, 3) a calculation, in which samples with high initial haze have been excluded.

Test samples	**Raw data [%]**	**$Haze_{Initial}$ cst. (0.4) [%]**	**Excl. (>0.6) [%]**
Test person 1, ShineOn low intensity	91.60 ± 4.39	91.93 ± 2.14	89.88 ± 3.33 (2/11)
Test person 2, ShineOn low intensity	96.14 ± 7.29	93.45 ± 3.04	91.67 ± 5.41 (4/11)
Mean: ShineOn low intensity	93.87 ± 6.07	92.69 ± 2.68	90.66 ± 4.22 (6/22)
Test person 1,ShineOn high intensity	100.58 ± 1.79	101.76 ± 1.44	100.45 ± 1.84 (1/11)
Test person 2, ShineOn high intensity	103. 05 ± 3.92	102.56 ± 2.21	101.25 ± 2.37 (2/11)
Mean: ShineOn high intensity	101.82 ± 2.96	102.16 ± 1.94	100.83 ± 2.10 (3/22)

The above table shows that the results are at the same level regardless of which method of calculation is used.

Consequently, in the following, the stated results are from the calculation with constant initial haze (corresponding to 0.4), as the standard deviation of these data is lower than the calculations carried out on raw data.
Furthermore, it is our opinion that a more true and fair result is achieved, because high initial haze may cause that the self-cleaning effect calculated to be considerably higher than 100%.

Operator dependency

In order to determine whether it is of any importance that ShineOn is applied by a non-trained and an internal SCF person, the operator dependency of application of ShineOn is tested. The test includes an internal SCF operator (Test person 1) and a non-trained operator from Danish Technological Institute (Test person 2).

The results show that the application of ShineOn is not operator dependent.

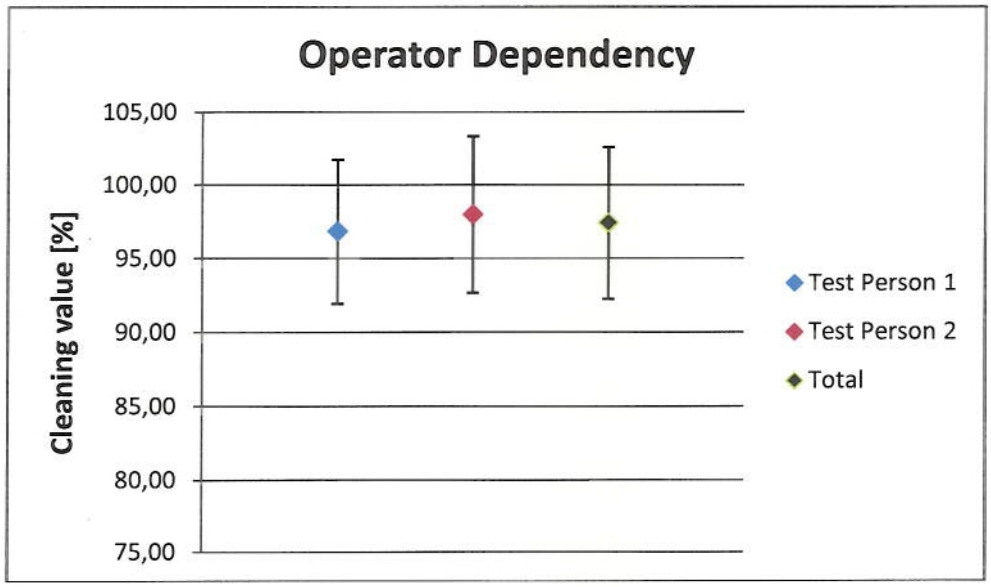

Normal intensity in self-cleaning test (ISO 4892) vs. 1.75x

Likewise, it was examined whether the intensity of the light exposure has an effect compared to the self-cleaning effect.

Based on the test the following can be concluded:

- ShineOn is self-cleaning at normal and high intensity in the self-cleaning test

Test samples	Low intensity (0.68 W/m^2/nm) [%]	High intensity (1.19 W/m^2/nm) [%]
ShineOn	92.69±2.68	102.16±1.94

ShineOn (normal intensity)

Based on the test the following can be concluded:

- Glass reference samples cannot be categorised as self-cleaning
- ShineOn, however, can be categorized as self-cleaning, as all individual test samples were categorised as self-cleaning

Test samples	Total [%]	Number of test samples which are self-cleaning	Test person 1 [%]	Test person 2 [%]
Glass reference samples	78.44 ± 4.58	–	–	–
ShineOn	92.69 ± 2.68	100 %	91.93 ± 2.14	93.45 ± 3.04

Summary

Based on the executed tests the following conclusions can be made:

The ShineOn product can be categorised as self-cleaning according to standard NMP3-CT-2003-505952, independent of the UV-exposure.

No operator dependency was registered at the application of the ShineOn product.

Yours sincerely
Centre for Plastics Technology

Anne-Lise Høg Lejre

Anne-Lise Høg Lejre
Centre manager

Phone: +45 72 20 31 16
Email: anne-lise.h.lejre@teknologisk.dk

The testing has been performed on the General Terms and Conditions regarding Commissioned Work accepted by the Danish Technological Institute

General Terms and Conditions regarding Commissioned Work Accepted by the Danish Technological Institute*

General stipulations

These General Terms and Conditions shall apply to all commissioned work performed by the Danish Technological Institute ("the Institute") for a contract party (the "customer"), including, but not limited to, counselling, instruction, information retrieval and communication, testing, research, sale and leasing. Unless otherwise agreed, these General Terms and Conditions shall also apply to any other and subsequent agreements between the Institute and the customer. Unless specifically accepted in writing by the Institute, any deviating provisions or provisions to the contrary contained in the order placed by the customer or in his acceptance shall not apply.

However, the Institute's "General Terms and Conditions regarding Certification, Inspection or Approval Bodies Associated with the Danish Technological Institute" shall apply to commissioned work relating to certification, inspection or approval schemes.

1. Scope of commissioned work

1.1 The nature, contents and financial conditions of the commissioned work shall be stated in a written agreement. Any amendments to the agreement shall be in writing.

1.2 Time schedules, price estimates, etc. are approximate unless otherwise agreed in writing. If the Institute foresees major delays or budget overruns compared to the agreed terms or material obstacles to the performance of the commissioned work, the customer shall be informed thereof, following which he shall be entitled to change or stop the work, cf. clause 6.1.

1.3 The Institute shall be entitled to a fee for work performed regardless of whether the results expected by the customer are achieved, unless it has been agreed in writing between the parties that the Institute's fee is contingent upon the achievement of concrete, specified results.

1.4 The Institute shall be entitled to have commissioned work performed by a sub-contractor.

2. Professional discretion

2.1 The Institute will observe customary professional discretion with respect to disclosure of the performance of commissioned work and with respect to any agreements. A special agreement in writing shall be concluded if the customer requires secrecy as such, for example regarding know-how of the customer that may come to the knowledge of the Institute during the performance of commissioned work.

2.2 If any test or development work leads to results of interest to the general public, the Institute may publicly announce such results unless otherwise agreed in a secrecy agreement as mentioned under clause 2.1.

2.3 When the Institute undertakes work that involves an assessment of a service provided by a third party, the customer accepts and understands that the Institute may approach such third party and other relevant bodies in order to obtain information for use in performing the work.

2.4 The Institute shall at any time be entitled to pass on information, which the Institute is under a statutory obligation to disclose.

2.5 If, in the course of performing commissioned work, the Institute becomes aware of factors that in the opinion of the Institute may cause material damage to health or environment, the Institute may, if required, inform the customer thereof. In the event that the customer does not, as quickly as possible, take the steps necessary to prevent or limit the risk of material damage to health or environment, the Institute shall, notwithstanding any separate agreement on discretion or secrecy, be entitled to pass on such knowledge to the relevant authorities.

3. Reference to results, etc.

3.1 The customer may only publish the reports of the Institute in their entirety.

3.2 The customer may not mention or refer to the Institute or the Institute's employees for advertising or marketing purposes unless the Institute has granted its written consent in each case. Such consent shall lapse if the customer stops or postpones the work, cf. clause 6.1.

3.3 Course material issued by the Institute may not be copied or duplicated. Course material on loan from the Institute shall remain the property of the Institute.

3.4 The Institute shall be entitled to demand that the customer returns reports, etc. prepared by the Institute together with the pertinent documents if the Institute discovers any errors or defects in such material.

4. Rights relating to the results of the commissioned work

4.1 The tangible results produced by the Institute in connection with commissioned work and the right to utilise such results shall be the exclusive property of the customer. Results in the form of tangible goods, including, but not limited to, prototypes will be handed over to the customer as soon as the final accounts have been settled.

4.2 Unless otherwise agreed in writing, know-how and other intangible property rights developed by the Institute or ascertained by the Institute in connection with performing the work shall be the property of the Institute. Such rights may be utilised by the customer for his own use to the extent laid down in writing between the parties or specifically stated as an implied condition.

5. Fees and terms of payment

5.1 Commissioned work shall be performed according to account rendered based on the hourly rates from time to time fixed by the Institute plus transport charges and other outlays.

5.2 In respect of long-term work, the Institute shall be entitled regularly to adjust the hourly rates stated under 5.1. The customer shall receive notice of such adjustments 30 days prior to the date on which they come into force.

5.3 The Institute shall be entitled to issue invoices on account once a month for work performed in the past month.

5.4 In case of overdue payment of balances due to the Institute, interest shall be charged at the rate of 1.5% for each commenced period of one month.

6. The right to change and cancel orders

6.1 If the customer issues instructions to stop or postpone the work, cf. clause 1.2, work already performed shall be paid for according to invoice, just as the customer shall reimburse the Institute for any costs incurred in connection with the cancelled or postponed work that the Institute has already undertaken to pay, such as expenses to a third party, special equipment or premises, etc.

6.2 Moreover, the nature or scope of commissioned work may only be changed subject to the written consent of the Institute.

7. Liability

7.1 The Institute shall be liable towards the customer for any errors and negligence in connection with the performance of the work pursuant to the general rules of compensation of Danish law, subject to such limitations as follow from clauses 7.2 to 7.12. the Institute shall in no event be liable for circumstances or events causing a loss that are not attributable to any errors or negligence on the part of the Institute.

7.2 If the performance of commissioned work is stopped or postponed (cf. clause 6), the Institute shall not be liable for any defects or errors in work already performed.

7.3 The Institute shall not be liable for injury or damage arising in connection with the use of counselling provided by the Institute or test or control reports prepared by the Institute if the use thereof is outside the scope of the commissioned work or the specified objects.

7.4 If the Institute's work is not concluded with a report or the delivery of a service, or if the service provided consists of a statement in which it is specified that it is based on an estimate or assessment, the Institute shall not be held liable unless the Institute is guilty of gross negligence.

7.5 Unless the Institute has issued a written warranty for the completion of the work at a specific time, the Institute shall not accept liability for loss or damage caused by delays in the performance of commissioned work.

7.6 The Institute shall not be held liable for tortious acts on the part of any one of the Institute's sub-contractors, unless such sub-contractor has been appointed by the Institute without being proposed or approved by the customer.

7.7 In case of joint liability between the Institute and one or more parties, the Institute shall only accept liability for such proportion of the loss suffered by the customer as is accounted for by the share of the overall liability attributable to the Institute.

7.8 If the Institute has undertaken, on behalf of the customer, to verify that services provided by a third party to the customer are according to contract, the Institute shall only be held liable for loss or damage that the customer might suffer owing to the Institute's failure to point out, in due time, that a specific service is not according to contract. Thus, the Institute's liability shall be subordinated to the claim for compensation that the customer may make against the third party in question, and the Institute's liability shall moreover by subject to the other limitations stated in this clause 7.

7.9 If the Institute has received samples or equipment from the customer, the Institute shall exclusively be held liable for loss of or damage to such samples or equipment if an agreement in writing has been made with the customer to return such samples and equipment. In addition, in such event, the Institute shall only be held liable if it can be substantiated that the Institute is guilty of gross negligence, and the compensation can in no event exceed the cost of the material necessary for manufacturing the samples or equipment in question. If the return of samples and equipment has not been agreed upon, the Institute will only keep such samples and equipment for a period of up to six months after the completion of the work.

7.10 The Institute cannot be held liable for more than the direct loss suffered by the customer. Thus, the Institute shall not be held liable for losses on operations, loss of earnings or any other indirect losses. The Institute's total liability shall not exceed DKK 1,000,000 for each individual claim except for bodily injury according to Danish law.

7.11 If any third party holds the Institute liable for bodily injury or damage to property caused by work performed by the Institute, including, but not limited to, product liability, the customer shall be obliged to indemnify and hold the Institute harmless from any claim exceeding the amount of any claim(s) that can be brought against the Institute pursuant to the provisions of this clause 7. The Institute may request the customer to defend any such claim on behalf of the Institute.

7.12 The Institute cannot be held liable for claims regarding loss, damage or injury that have not been made in writing within five years after delivery by the Institute of the service in respect of which the claim is made. In addition, the Institute's liability is contingent upon the customer complaining in writing as soon as he has become aware of, or should have become aware of, the existence of a potential claim for compensation against the Institute. Notwithstanding the said time limit of five years, the Institute shall not be liable for any damage or injury that was impossible to foresee in view of the know-how and technology available at the time of the performance of the commissioned work.

8. Disputes

8.1 Any dispute or controversy arising between the Institute and the customer shall be settled according to Danish law before the Maritime and Commercial Court of Copenhagen as the court of first instance.

November 2006

* In Danish, the name "Teknologisk Institut" is used.